MEMSENSE

Customer Focused Inertial Solutions

HP IMU

Product Specification & User Guide

Document Number: DOC00289

Document Revision: J

MEMSENSE.COM

888.668.8743

Information provided herein is considered accurate however is not guaranteed. Memsense reserves the right to change specifications at any time, without notice.

Document Change History

REV	STATUS	DESCRIPTION	DATE
A	Obsolete	Original	5-5-2010
B	Obsolete	Updated specification table. Reduced maximum sample rate to 800 Hz to support future feature additions.	11-15-2010
C	Obsolete	Updated RS422 connection section. Added sample rate and temperature information to part numbering table.	5-3-2011
D	Obsolete	Updated the HP accelerometer noise specifications.	5-18-2011
E	Obsolete	Updated the HP accelerometer noise specifications. Added 3000 deg/sec gyro specifications. Updated USB DAQ Section.	6-29-2011
F	Obsolete	Updated Logos, output sample rate, baud rate configurations and HP accelerometer specifications.	5-22-2013
G	Obsolete	Section 3.1: Added mounting screw torque specifications. Section 4.3: Updated connection description. Section 5.1: Deleted configured model descriptions. Section 5.2: Deleted internal power supply DAQ accessory Section 5.3: Remove HN accelerometer specifications. Section 6: Deleted Terms and Conditions	3-13-2015
H	Obsolete	Removed overlapping specifications. Changed overall format.	6-4-2015
J	Released	Added maximum power supply current specification. Updated velocity random walk parameters.	1-20-2016

TABLE OF CONTENTS

1.0 OVERVIEW 1

2.0 SPECIFICATIONS 1

3.0 MECHANICAL 3

3.1 Dimensions 3

3.2 Coordinate System 4

4.0 COMMUNICATIONS 5

4.1 Commands 5

4.2 Sample Format 5

4.3 Measurement 7

5.0 HARDWARE 8

5.1 Connections 8

5.2 Pin Function Description 8

5.3 RS422 Connection Description 9

5.4 Digital Sensor Encode Pulse Output 10

6.0 OPTIONS 11

6.1 Part Numbers 11

6.2 USB Data Acquisition (DAQ) Module Options 11

Information provided herein is considered accurate however is not guaranteed. Memsense reserves the right to change specifications at any time, without notice.

1.0 OVERVIEW

The *HP IMU* is a MEMS Inertial Measurement Unit featuring precision accelerometers and vibration rejecting gyroscopes. Custom algorithms provide temperature compensated serial digital outputs of triaxial acceleration, angular rate and magnetic field data in real time at sample rates up to 800 Hz. The *HP IMU* also supports external analog and digital inputs that allow other sensors, digital components or switches to be integrated from your application. The IMU features a Mil-Standard connector and is housed in an ultra- durable and compact aluminum housing. The *HP IMU* can be ordered with varied dynamic ranges by sensor axis enabling perfect tuning for specific applications.

2.0 SPECIFICATIONS

Table 1 - Specifications

ACCELERATION						*UNITS*	*NOTES*
Dynamic Range	**± 2**	**± 5**	**± 10**	**± 30**	**± 50**	g	Minimum
Bias Instability	4.5	14.3	28.5	91.7	182.0	µg	Typical
Offset	± 1.4	± 1.6	± 2.4	± 4.7	± 5.9	mg	Typical
Nonlinearity	± 0.3	± 0.3	± 0.3	± 0.3	± 0.3	% of FS	Typical
Velocity Random Walk	0.014	0.050	0.101	0.230	0.331	$m/s/h^{-1/2}$	Typical
Noise Density	42	99	170	665	772	$\mu g/Hz^{-1/2}$	Typical
Digital Scale Factor	9.1553E-04	2.2888E-04	4.5776E-04	1.3733E-03	2.2888E-03	g/bit	
Bandwidth [1]	50	50	50	50	50	Hz	-3dB point

ANGULAR RATE						*UNITS*	*NOTES*
Dynamic Range	**± 150**	**± 300**	**± 600**	**± 1200**	**± 3000**	°/s	Minimum
Bias Instability	20	20	20	20	30	°/h	Typical
Offset	± 0.051	± 0.051	± 0.063	± 0.097	± 0.159	°/s	Typical
Nonlinearity	± 0.01	± 0.01	± 0.01	± 0.01	± 0.01	% of FS	Typical
Angle Random Walk	2.0	2.0	2.0	2.0	2.0	$°/h^{-1/2}$	Typical
Noise Density	0.051	0.051	0.051	0.054	0.070	$°/s/Hz^{-1/2}$	Typical
Digital Scale Factor	6.8665E-03	1.3733E-02	2.7466E-02	5.4932E-02	1.3733E-01	°/s /bit	
Bandwidth [1]	50	50	50	50	50	Hz	-3dB point

Information provided herein is considered accurate however is not guaranteed. Memsense reserves the right to change specifications at any time, without notice.

MAGNETIC FIELD		UNITS	NOTES
Dynamic Range	± 1.9	gauss	Minimum
Offset	± 0.005	gauss	Typical
Nonlinearity	± 0.1	% of FS	Typical
Noise Density	79.2	μgauss /$Hz^{-1/2}$	Typical
Digital Scale Factor	8.6975E-05	gauss /bit	
Bandwidth [1]	50	Hz	-3dB point

TEMPERATURE		UNITS	NOTES
Digital Scale Factor	1.8165E-02	°C/bit	

EXTERNAL ANALOG INPUTS		UNITS	NOTES
Voltage Range	0 to 5	VDC	
Input Impedance	8	M Ω	
Bandwidth	50	Hz	

EXTERNAL DIGITAL INPUTS			UNITS
High Level Input	2.31 (min)	3.3 (max)	VDC
Low Level Input	0 (min)	0.99 (max)	VDC
Input Leakage		± 1	μA

PHYSICAL		UNITS	NOTES
Dimensions	2.0 x 1.5 x 0.65	in.	(L x W x H)
Mass	55	grams	

OPERATIONAL REQUIREMENTS		UNITS	NOTES
Supply Voltage	5.4 to 9.0	VDC	
Supply Current	210 (280)	mA	Typical (Max)
Interface Connector	MIL-DTL-32139		15 pin

ABSOLUTE MAXIMUM RATINGS		UNITS	NOTES
Acceleration Powered	2000	*g*	0.5 ms any axis
Supply Voltage	-0.3 (min) to +10 (max)	VDC	
"C" Temperature Range	0 to 70	°C	
"M" Temperature Range	-40 to 85	°C	
Storage Temperature	-55 to 125	°C	

1.) Other bandwidth configurations are available, contact sales for more information.
2.) Mixed dynamic ranges and other configurations are available, contact sales for more information.
3.) Custom correction temperature profiles are available, contact sales for more information.
4.) Typical Values at 25°C, Supply Voltage = 7.0 VDC, 0 °/s, unless otherwise noted.

Information provided herein is considered accurate however is not guaranteed. Memsense reserves the right to change specifications at any time, without notice.

3.0 MECHANICAL

3.1 Dimensions

The HP IMU is available in a custom package measuring 2.000 in. length × 1.500 in. width × 0.645 in. height. Holes are located near the center of each side allowing #3-48 machine screws to be utilized to mount the IMU to a PCB or chassis. The minimum mounting screw torque required is 2.5 in.lb while a maximum of 3.0 in.lb should be observed when mounting to aluminum platforms. The use of two 1/16 in. alignment pins is also supported on each side of the lower housing. Figure 1 depicts the physical dimensions of the part and its features.

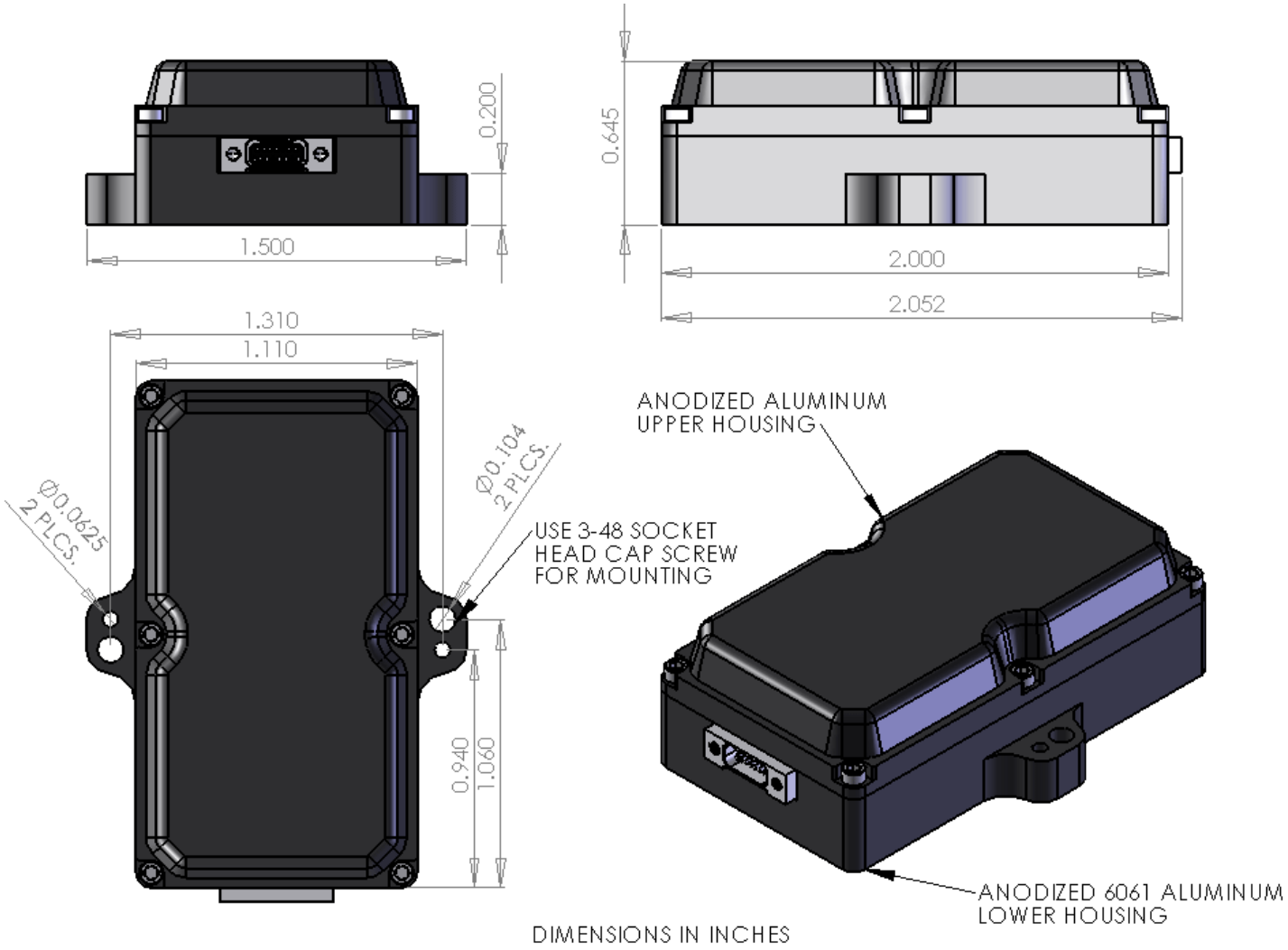

Figure 1 - Physical Dimensions

Information provided herein is considered accurate however is not guaranteed. Memsense reserves the right to change specifications at any time, without notice.

3.2 Coordinate System

The coordinate system for the IMU follows the right hand rule convention. The sign convention for the accelerometers is configured to produce a positive signal when the IMU is accelerated in the opposite direction of the axis arrow. As an example, the IMU pictured in Figure 2 below (given the X and Y axis are parallel to the earth's surface) will produce 0 *gs* for the X and Y axes and a positive 1 *g* for the Z-axis. As a further example, if the IMU were moved backwards (left side of the page) the X-axis accelerometer would produce a positive output. A counterclockwise rotation of the IMU about any of the depicted axis will produce a positive angular rate output for the corresponding axis.

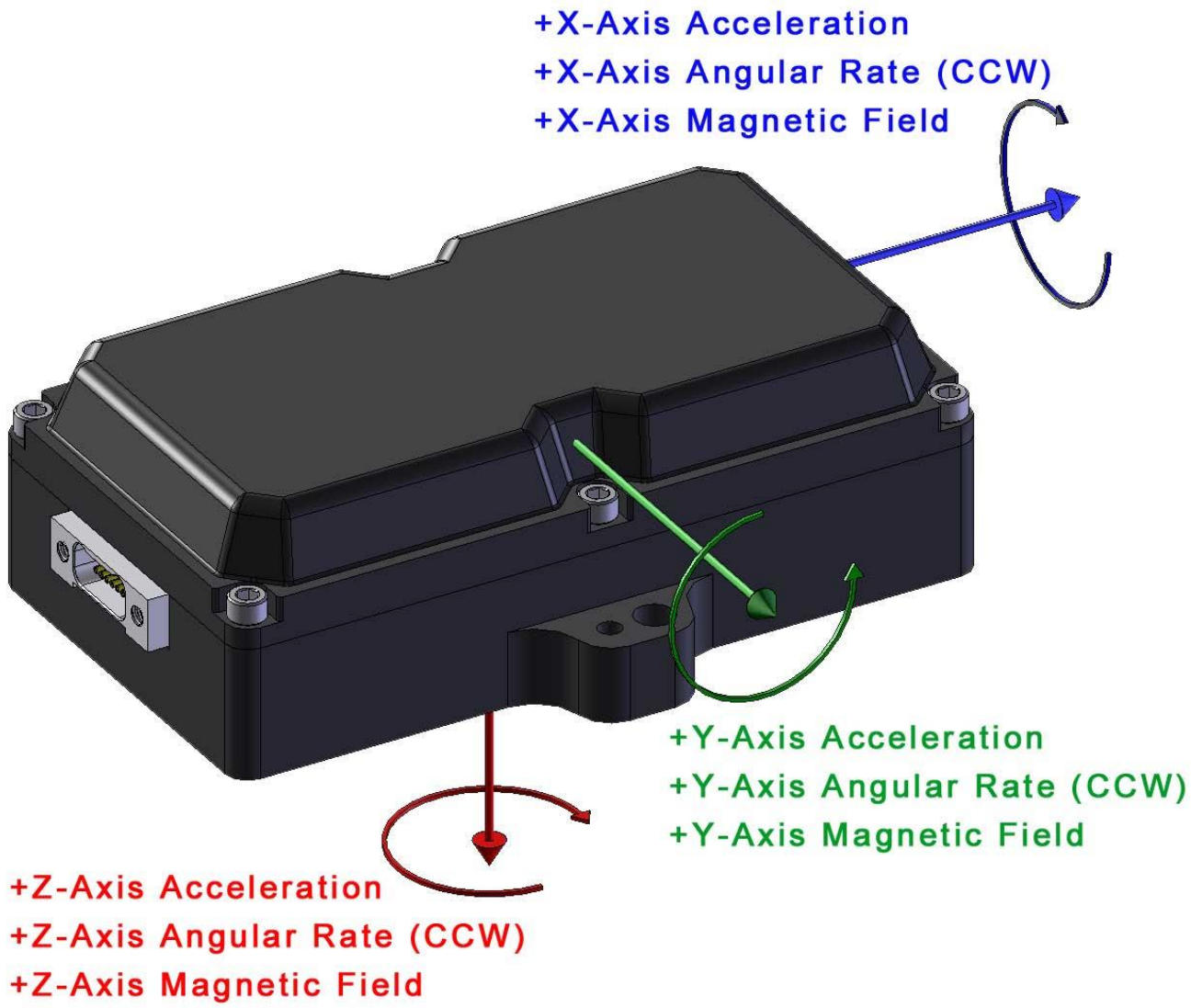

Figure 2 – HP IMU coordinate system, side view

4.0 COMMUNICATIONS

4.1 Commands

The HP IMU does not currently offer a command structure or API that allows modification of device characteristics at runtime.

4.2 Sample Format

Data samples are formatted as shown in Table 2. Each data channel (i.e. accelerometer, magnetometer, gyro) is represented by a signed (2's complement) 2-byte short (16-bit) integer that must be converted to its corresponding engineering unit before use (see Section 2.3). An individual data packet is collectively referred to as a *sample*.

Table 2 - Sample byte order/format

BYTE	ELEMENT	BYTE	ELEMENT
0	Synchronization byte (FF)	20	Gyroscope Z (LSB)
1	Synchronization byte (FF)	21	Accelerometer X (2/5/10g) (MSB)
2	Synchronization byte (FF)	22	Accelerometer X (2/5/10g) (LSB)
3	Synchronization byte (FF)	23	Accelerometer Y (2/5/10g) (MSB)
4	Message size	24	Accelerometer Y (2/5/10g) (LSB)
5	Device ID	25	Accelerometer Z (2/5/10g) (MSB)
6	Message ID	26	Accelerometer Z (2/5/10g) (LSB)
7	Pulse Marker / External Digital Inputs	27	Magnetometer X (MSB)
8	Reserved Future Use	28	Magnetometer X (LSB)
9	Product ID	29	Magnetometer Y (MSB)
10	Frame Counter (MSB)	30	Magnetometer Y (LSB)
11	Frame Counter	31	Magnetometer Z (MSB)
12	Frame Counter (LSB)	32	Magnetometer Z (LSB)
13	Serial Number (MSB)	33	External Analog In 1 (MSB)
14	Serial Number (LSB)	34	External Analog In 1 (LSB)
15	Gyroscope X (MSB)	35	External Analog In 2 (MSB)
16	Gyroscope X (LSB)	36	External Analog In 2 (LSB)
17	Gyroscope Y (MSB)	37	Temperature Gyro (MSB)
18	Gyroscope Y (LSB)	38	Temperature Gyro Z (LSB)
19	Gyroscope Z (MSB)	39	8-bit Checksum

Message Header Message Payload Message Checksum

Graphically, the sample has the format shown in Figure 3:

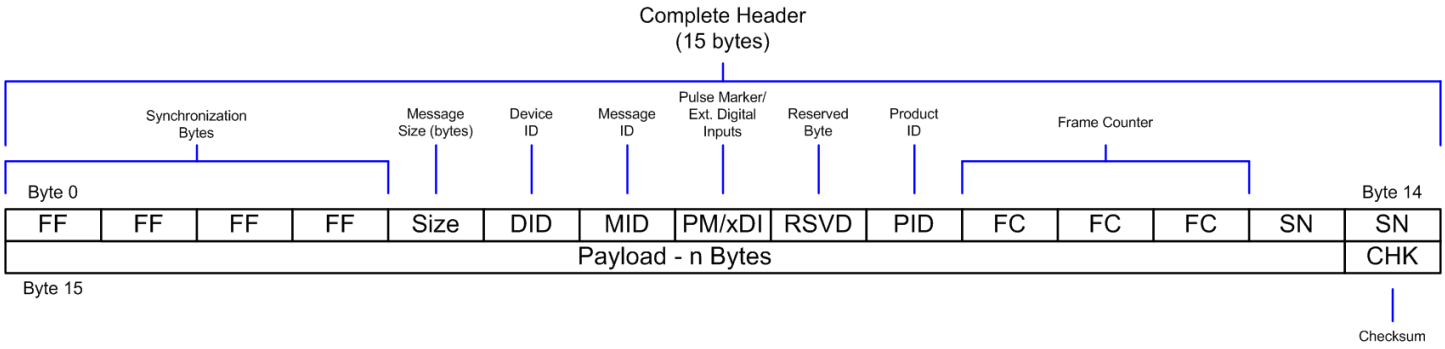

Figure 3 - Sample structure

The complete structure of a sample is detailed in Table 3.

Table 3 - Sample Element Descriptions

BYTE	ELEMENT	DESCRIPTION
0 - 3	Synchronization bytes	each byte encoded as 0xFF hex
4	Message size	Size in bytes of entire data packet including complete header
5	Reserved	
6	Message ID	Type of message. Data messages with MID = 0x14 hex (20 decimal).
7	Pulse Marker External Digital Inputs	Bit 3 of byte 7 is the pulse marker. If this bit is high a pulse output should be correlated to the frame otherwise the bit is 0. Bits 0-2 map to external digital inputs 1-3 respectively. Bits 4-7 are not used.
8-9	Reserved	
10-12	Frame Counter	The frame counter is a 23 bit unsigned integer with a maximum count of 16,777,216.
13 - 14	Serial Number	Unique number identifying each device
15	Payload	The payload size is calculated as follows: payload size = message size – 15(header) – 1(Checksum byte)
37	Checksum byte	8-bit checksum byte. Sum sample contents (header + payload). DO NOT include the checksum byte. The summed value should equal the checksum if the message is valid. If larger than 8-bit addition is used to calculate the checksum, the checksum will be the remainder of a divide by 256.

4.3 Measurement

Accelerometer, gyro and magnetometer data is temperature compensated on the HP IMU. The payload element of the data packet contains accelerometer, gyro and magnetometer samples, which must be converted to values that represent usable data (e.g. rotational rate, G-force, gauss). The data is transmitted as signed (2's complement) 16-bit integers. The following function must be used for conversion of sample values:

Equation 1: result = *raw_payload_value* x *digital_scale_factor*

where result is the converted value in the appropriate units (e.g. deg/sec), raw_payload_value is the raw component-specific value from the payload (e.g. accelerometer X), and digital scale factor is the sensitivity expressed in engineering unit per bits. Digital scale factor values are listed in the Specification Table 1 (NOTE: You must use the value specific to the dynamic range of the device you have purchased). For example, if you have purchased a ±300 deg/s, ±2 G MX-IMU, the corresponding equations for the X component would be:

$$value_x = raw_payload_value_x_{gyro} \times 1.3733 \times 10^{-2}\ ^{\circ}/s\ /bit$$

$$value_x = raw_payload_value_x_{accel} \times 9.1553 \times 10^{-5}\ G/bit$$

where raw_payload_value_x is taken from the sample payload corresponding to the x-components of the gyro and accelerometer, respectively. The resulting values have units of degrees/sec and G's, respectively.

Although the sensor data is temperature compensated, a customer's application may require the use of temperature information, therefore a temperature value obtained from each gyro is provided. The temperature data provided in the payload requires a different conversion process. The data is transmitted as signed (2's complement) 16-bit integers. The following function must be used for conversion of temperature sample values:

Equation 2: result_deg_C = ($raw_payload_value_x_{temperature}$ *x digital_scale_factor*) + 25

where result is the converted value in degrees Celsius, raw_payload_value is the raw component-specific value from the payload in bits and the digital scale factor is the temperature sensitivity expressed in degrees C per bit (digital scale factors are listed in the Table 1 - Specifications).

In the cases where a custom dynamic range has been ordered, the digital scale factor can be found by the following equation:

Equation 3: *digital_scale_factor = dynamic_range* x 4.57764×10^{-5}

where digital scale factor is expressed in engineering units per bit and dynamic range is the unipolar range for the specific sensor axis (e.g. ±0075 º/s then 75 º/s should be used for the dynamic range in Equation 3).

5.0 HARDWARE

5.1 Connections

The HP IMU's output connector is a dual row metal shell 15-pin Nano connector produced by Omnetics that meets all MIL-DTL-32139 specifications. The mating connector is a dual row Bi-Lobe Nano connector with an Omnetic part number of 28000-015. An interface cable for the HP IMU can be ordered that has the Bi-Lobe Nano that connects to the IMU and a Hirose HP30-6P-6S on the opposite end to allow connection to the USB- DAQ module which converts the RS422 IMU output to USB for rapid device evaluation.

5.2 Pin Function Description

The pin functions for the IMU and mating connector are listed in Table 4 below:

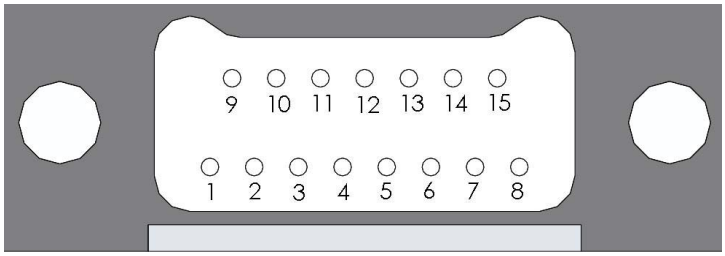

Figure 4 – Omnetics Bi-Lobe Nano interface connector A29100-015

Table 4 – HP IMU Connector Interface Pin Functions.

PIN NO.	*SIGNAL NAME*	*DESCRIPTION*	*WIRE COLOR*
1	VSUPPLY	Supply Voltage Input	Black 1
2	GND	Supply Voltage Return	Brown 1
3	ASPIN2	Analog External Input 2	Red 1
4	DSPIN2	Digital External Input 2	Orange 1
5	DSPOUT1	Digital Sensor Encode Pulse Output	Yellow 1
6	DSPOUT2	Pulse Output at 1 Second Intervals	Green 1
7	TX_Z	RS422 Inverting Output	Blue 1
8	TX_Y	RS422 Non-Inverting Output	Purple 1
9	GND	Supply Voltage Return	Grey 1
10	ASPIN1	Analog External Input 1	White 1
11	DSPIN1	Digital External Input 1	Black 2
12	DSPIN3	Digital External Input 3	Brown 2
13	NC	No Connect, Internal Use Only	Red 2
14	RX_B	RS422 Inverting Input	Orange 2
15	RX_A	RS422 Non-Inverting Input	Yellow 2

Information provided herein is considered accurate however is not guaranteed. Memsense reserves the right to change specifications at any time, without notice.

Table 5 - Pin functions for HR30-6P-6S manufactured by HIROSE.

INTERFACE PIN FUNCTIONS – IMU Connector		
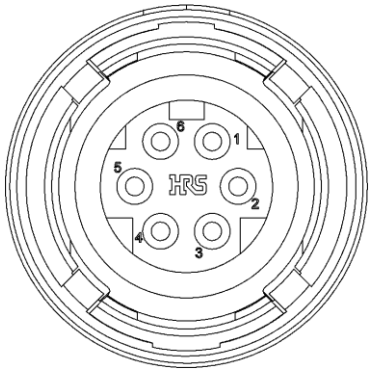	**Port No.**	**RS422/LVDS**
	1	Not Used
	2	VDD
	3	TX_Y
	4	TX_Z
	5	GND
Figure 5 - HIROSE PN: HR30-6P-6S	6	Not Used

5.3 RS422 Connection Description

The HP IMU RS422 connection is configured as an 8-bit UART with one start bit, eight data bits, and one stop bit. The baud rate and sample rate options are described in Table 8. The baud rate can be ordered from 115200 to 921600 bps. The sample rate for HP IMUs can be ordered from 150 samples per second up to 800 samples per second. Data is sent from the IMU via the YZ differential driver pair and should be terminated with a 120 ohm resistor. The HP IMU is not currently configured to receive data.

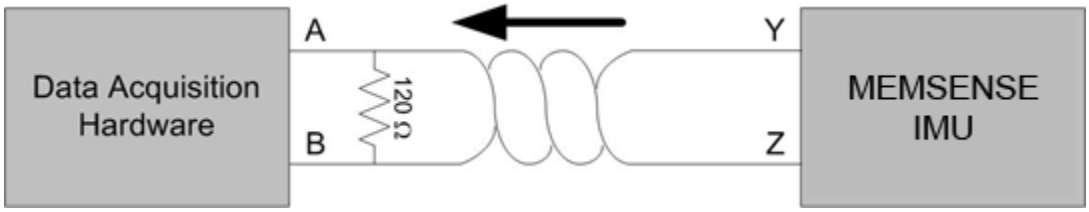

Figure 6– RS422 Full-duplex direct connection diagram

5.4 Digital Sensor Encode Pulse Output

The HP IMU's pin 5 output contains a digital pulse train that indicates timing for when each sensor signal is encoded. The rising edge of the pulse marks the beginning of each encode while the falling edge indicates the encode completion for the associated signal. The time between encodes is 5 µs. Figure 7 below details the pulse waveform for pin 5.

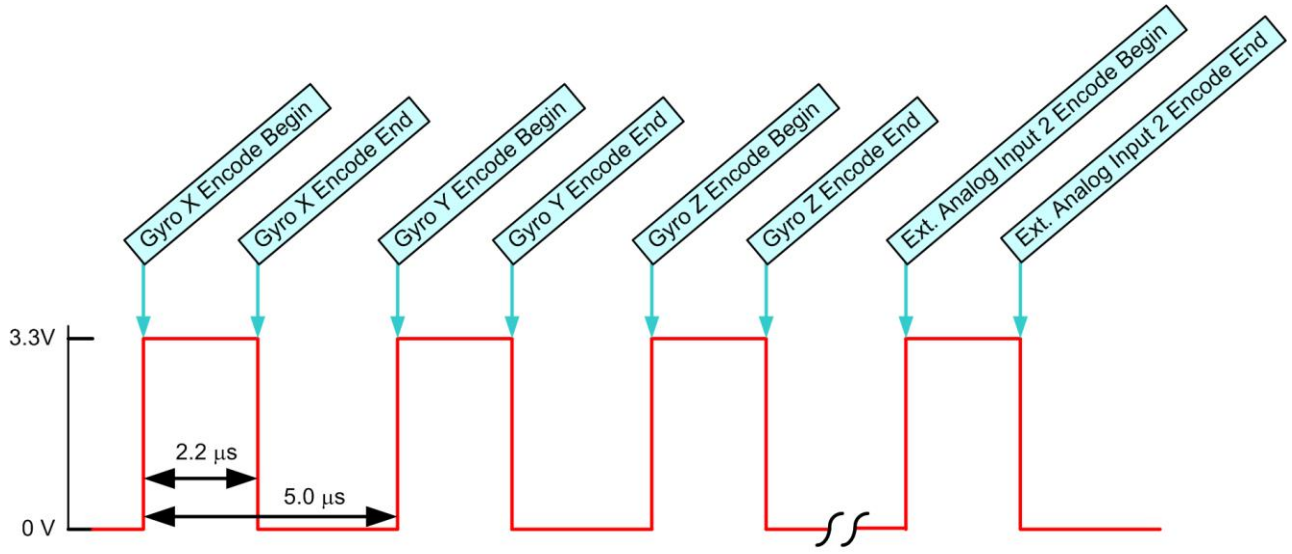

Figure 7 - Digital Sensor Encode Output Waveform

Table 6 – HP IMU Sensor Signal Encode Orders

SIGNAL ENCODE ORDER	
ORDER	SENSOR SIGNAL
1	Gyroscope X
2	Gyroscope Y
3	Gyroscope Z
4	Accelerometer X
5	Accelerometer Y
6	Accelerometer Z
7	Magnetometer X
8	Magnetometer Y
9	Magnetometer Z
10	Gyroscope X Temperature
11	Gyroscope Y Temperature
12	Gyroscope Z Temperature
13	External Analog In 1
14	External Analog In 2

Information provided herein is considered accurate however is not guaranteed. Memsense reserves the right to change specifications at any time, without notice.

6.0 OPTIONS

6.1 Part Numbers

Table 7 - Standard Part Number

Part Number	Acceleration (g)	Angular Rate (°/s)	Magnetometer (gauss)	Bandwidth (Hz.)
HP005-0300F050R	±5	±300	±1.9	50

1.) Custom Acceleration Ranges ± 200g also available
2.) Custom Angular Rate Ranges available up to ± 5400 °/s
3.) Temperature Range of 0°C to 70°C add a "C" following the "R" in the Part Number
4.) Temperature Range of -40°C to 85°C add an "M" following the "R" in the Part Number
5.) Add the appropriate code from Table 8 after the temperature designation for output configuration.
6.) Custom Bandwidth can be ordered contact sales for more information.

Table 8- Output Sample rate and baud rate configurations.

Option Code	Sample Rate	Baud Rate
A	150	115200
B	200	230400
C	400	460800
D	600	921600
E	800	921600

6.2 USB Data Acquisition (DAQ) Module Options

The USB DAQ is available to purchase with your IMU to facilitate simple data collection using a PC. The module converts the IMU RS422 output to USB signals. Model number USB-H-8.5XR allows the use of an external power supply and has maximum voltage of 8.5 volts. The USB DAQ model number in Table 9 below is compatible with the HP IMU and is available for order.

Table 9 – USB DAQ Module Options

Part Number	Description	Max Voltage	Power Source	Protocol	Availability
USB-H-8.5XR	USB RS422 DAQ, Ext. power	8.5V	External Power	RS422	Standard - with HP IMUs ordered